Secure Grade: Top-secret( ) Secret( ) Privacy( ) Public(√)

Rockchip RK3568 High Speed PCB Design Guide

（Hardware Department）

Status: [ ] draft [ ] modifying [√] release	**Identifies:**	RK-YH-YJ-6012
	Version:	1.0.0
	Author:	will
	Date:	2021-4-12
	Approver:	Reviewer
	Date:	2021-4-12

Rockchip Electronics Co.,Ltd.

Disclaimer

This document is provided by “status" and Rockchip Electronics Co., Ltd ("our company ", the same below) does not provide any express or implied statement or warranty of any accuracy, reliability, integrity, merchantability, specific purpose and non infringement of any statement, information and content of this document. This document is intended as a guide only for use.

Due to product version upgrades or other reasons, this document may be updated or modified from time to time without notice.

Brand Statement

Rockchip and 瑞芯微 , 瑞芯 are trademarks of Rockchip Electronics Co., Ltd. And are exclusively owned by Rockchip Electronics Co., Ltd.

References to other companies and their products use trademarks owned by the respective companies and are for reference purpose only.

Copyright © 2021 Rockchip Electronics Co., Ltd.

Exceeding the scope of reasonable use, No part of this publication may be copied or reproduced without the written permission of our company, and may not be transmitted in any form.

Rockchip Electronics Co., Ltd.

Add: No.18 Building, A District, No.89, software Boulevard Fuzhou, Fujian, PRC

Web: www.rock-chips.com

Hotline: +86-591-83991906

Fax: +86-591-83951833

Email: fae@rock-chips.com

Table of Content

1.1 USB 2.0 13
1.2 USB 3.0 13
1.3 SATA 3.0 14
1.4 HDMI 2.0 14
1.5 PCIE 2.0 15
1.6 PCIE 3.0 16
1.7 EDP 17
1.8 QSGMII/SGMII 17
1.9 LVDS 18
1.10 MIPI 18
1.11 SDIO 19
1.12 SDMMC 19
1.13 eMMC 20
1.14 FSPI 20
1.15 NAND FLASH 20
1.16 LCDC 21
1.17 BT1120 21
1.18 BT656 21
1.19 RGMII 22
1.20 LPDDR3 31
1.21 DDR3 32
1.22 DDR3 ECC 35
1.23 DDR4 38
1.24 DDR4 ECC 41
1.25 LPDDR4 44

Copyright © 2021 Rockchip Electronics Co., Ltd.

1.26 LPDDR4X 45

Table Index

Table 1:USB 2.0 Layout Requirements 13

Table 2:USB 3.0 Layout Requirements 13

Table 3:SATA 3.0 Layout Requirements 14

Table 4:HDMI 2.0 Layout Requirements 14

Table 5:PCIE 2.0 Layout Requirements 15

Table 6:PCIE 3.0 Layout Requirements 16

Table 7:EDP Layout Requirements 17

Table 8: QSGMII/SGMII Layout Requirements 17

Table 9: LVDS Layout Requirements 18

Table 10: MIPI Layout Requirements 18

Table 11: SDIO Layout Requirements 19

Table 12: SDMMC Layout Requirements 19

Table 13: eMMC Layout Requirements 20

Table 14: FSPI Layout Requirements 20

Table 15: NAND FLASH Layout Requirements 20

Table 16: LCDC Layout Requirements 21

Table 17: BT1120 Layout Requirements 21

Table 18: BT656 Layout Requirements 21

Table 19: RGMII Layout Requirements 22

Table 20: LPDDR3 Layout Requirements 31

Table 21: DDR3 Data signal Layout Requirements 32

Table 22: DDR3 Control signal Layout Requirements 33

Table 23: DDR3 Command signal Layout Requirements 34

Table 24: DDR3 ECC Data signal Layout Requirements 35

Table 25: DDR3 ECC Control signal Layout Requirements 36

Copyright © 2021 Rockchip Electronics Co., Ltd.

Table 26: DDR3 ECC Command signal Layout Requirements 37

Table 27: DDR4 Data signal Layout Requirements..... 38

Table 28: DDR4 Control signal Layout Requirements 39

Table 29: DDR4 Command signal Layout Requirements 40

Table 30: DDR4 ECC Data signal Layout Requirements..... 41

Table 31: DDR4 ECC Control signal Layout Requirements 42

Table 32: DDR4 ECC Command signal Layout Requirements 43

Table 33: LPDDR4 Layout Requirements..... 44

Table 34: LPDDR4 Layout Requirements..... 45

Copyright © 2021 Rockchip Electronics Co., Ltd.

This guide provides information on PCB design for RK3568. Trace length should include package length and via length.

Intra-pair skew is the term used to define the difference between the length of the + and - lane of a differential pair. Inter-pair skew is used to describe the difference between the lengths of a differential pair from another differential pair, as Figure 1.

The spacing between signals show as Figure 2.

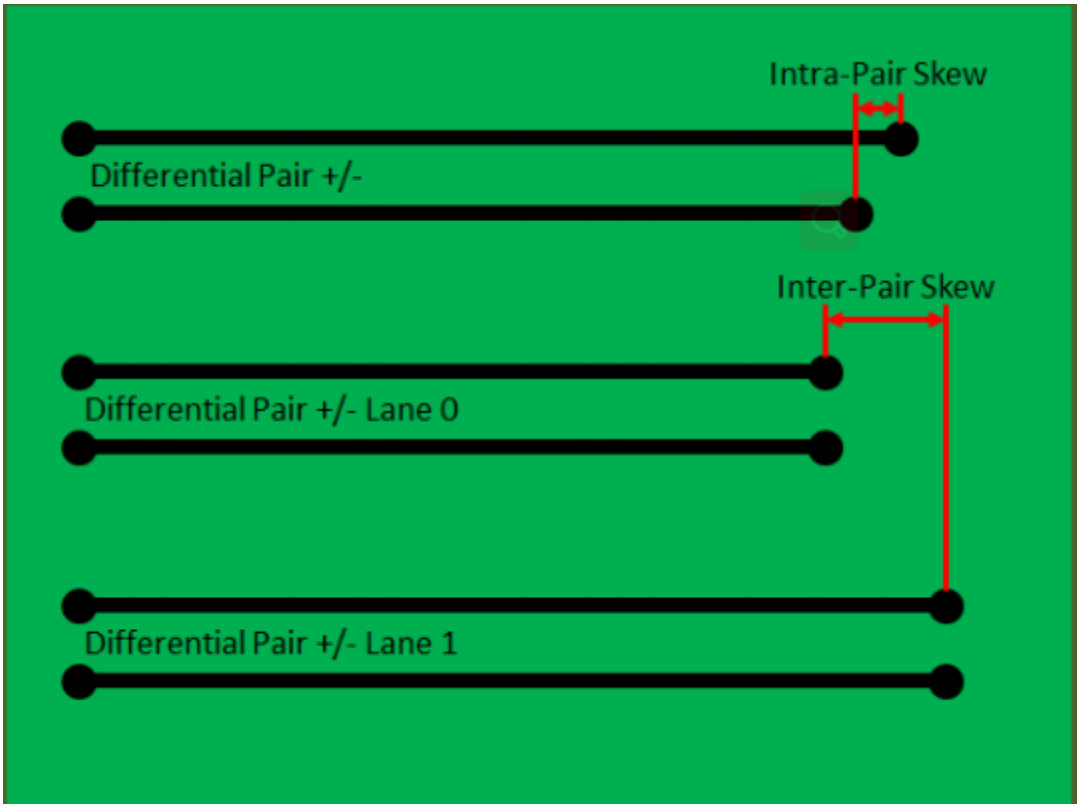

Figure 1

Copyright © 2021 Rockchip Electronics Co., Ltd.

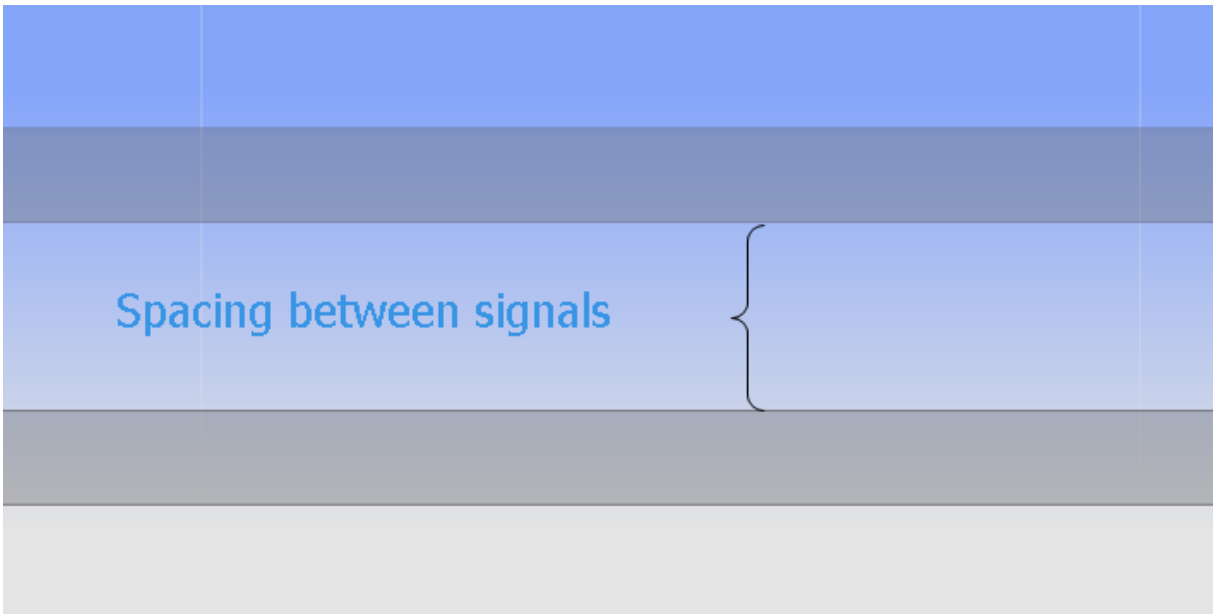

Figure 2

Below are some useful guidelines for RK3568 high speed signals, for example PCIE 2.0,USB3.0,SATA3.0,HDMI2.0,PCIE 3.0,QSGMII,LVDS,SGMII,MIPI.

(1)Differential pair signals often require a very tight delay skew between the positive and negative signal traces. Therefore, length differences need to be compensated for using serpentines (also called meanders). The geometry of serpentine traces need to be carefully chosen in order to reduce impedance discontinuity. The following figure shows the requirements for ideal serpentine traces. When length matching compensation occurs, it should be made as close as possible to the point where the variation occurs.

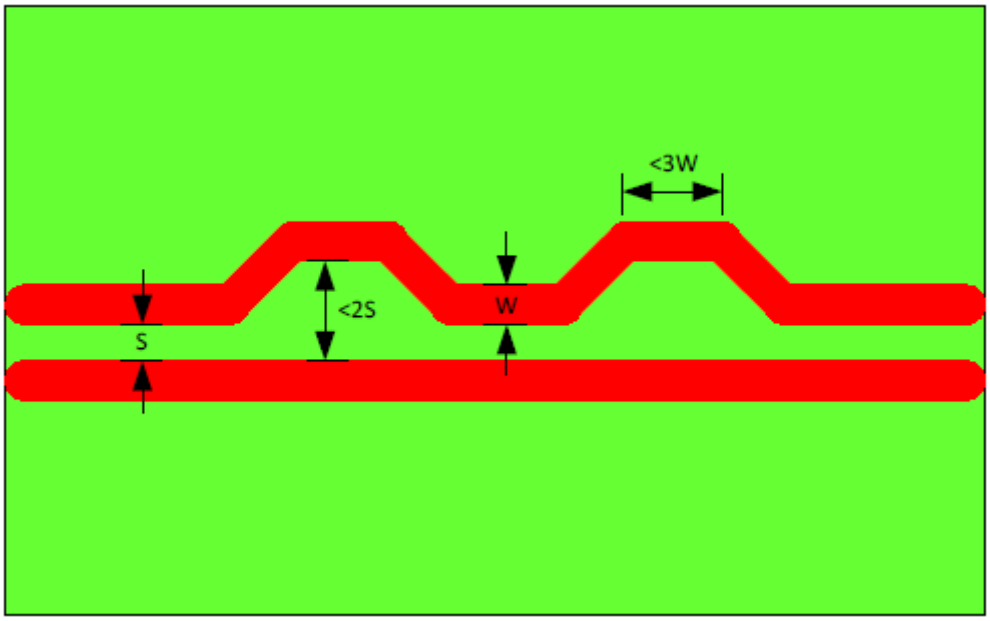

Figure 3: Preferred Serpentine Trace Geometry

Copyright © 2021 Rockchip Electronics Co., Ltd.

(2) Route all traces over continuous GND planes, with no interruptions. Any discontinuity or split in the ground plane can cause signal reflections and should be avoided.

(3) voiding the Ground plane underneath the SMT signal pads is necessary to minimize the impedance mismatch caused by the SMT pads.

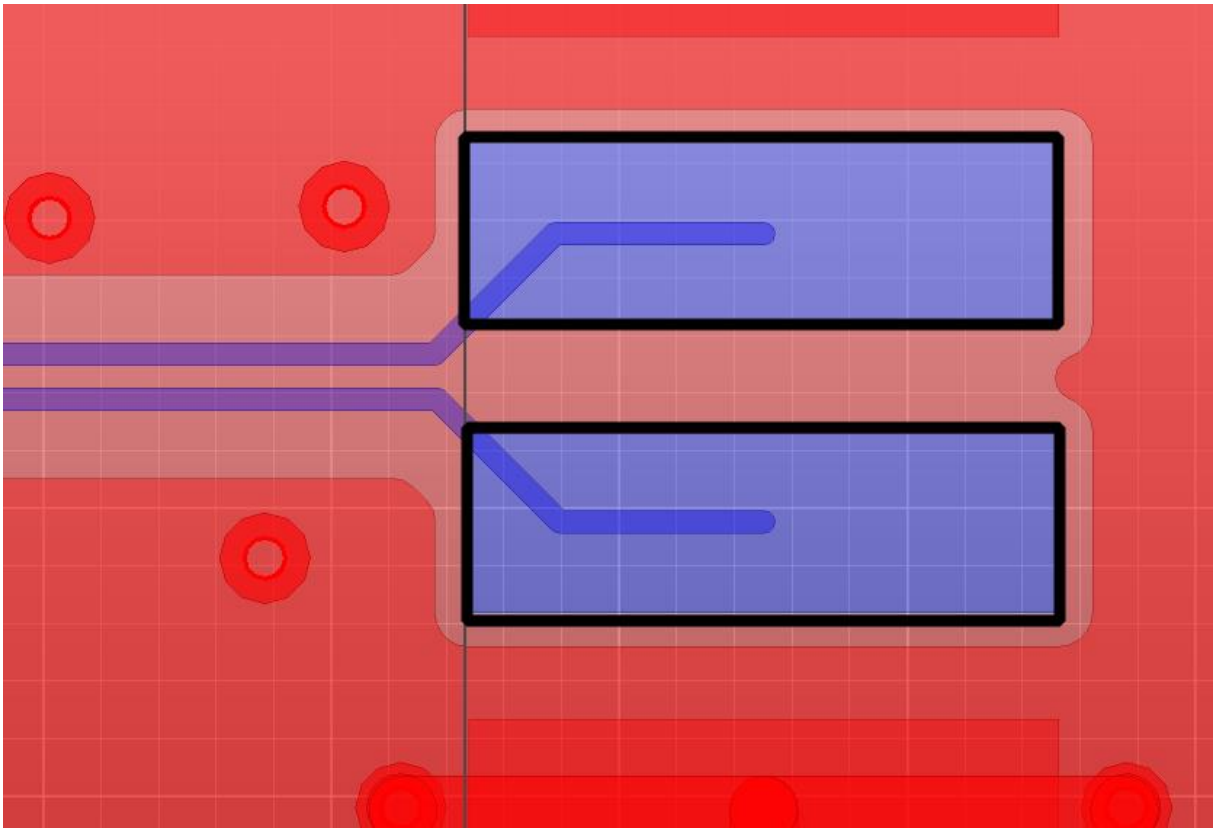

Figure 4

(4) If a signal trace switches layer and therefore, also the reference ground plane, stitching vias should to be added close to the layer change vias. This allows the return current to change ground plane. For differential signals, switching ground vias should be placed symmetrically.Recommend Ground via to signal via distance <30mil.

Copyright © 2021 Rockchip Electronics Co., Ltd.

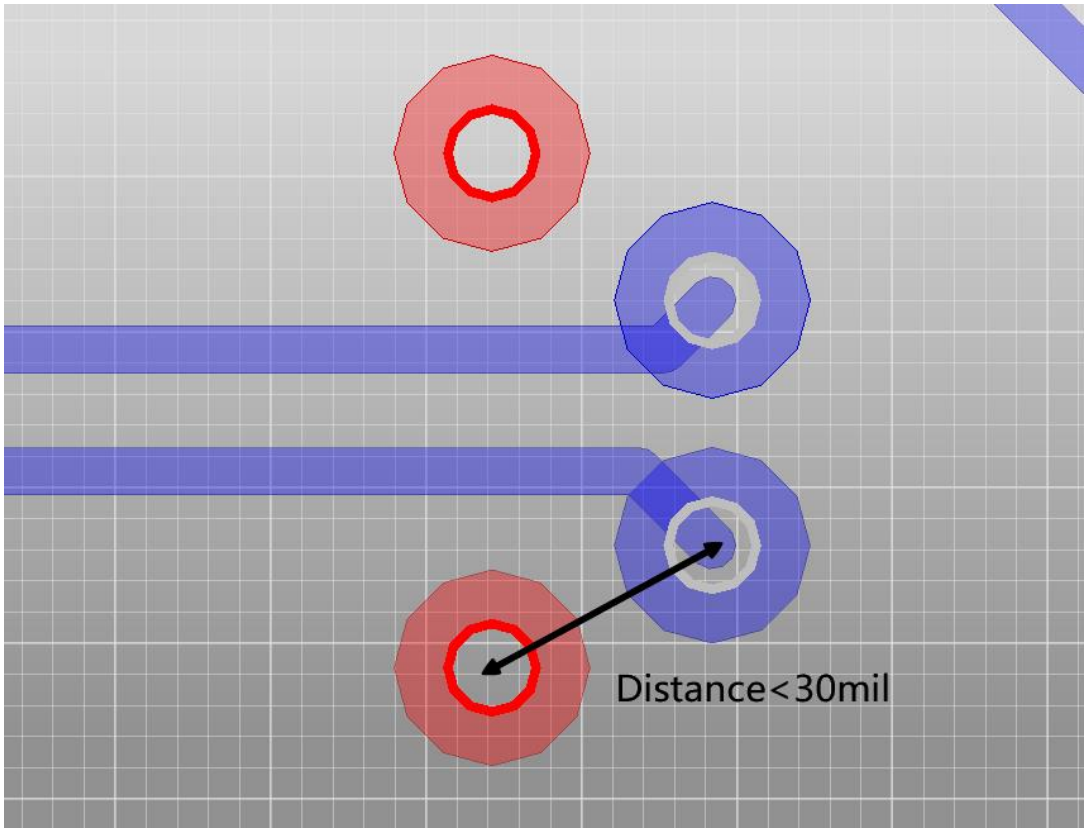

Figure 5

(5) Recommend keeping traces ≥3 times the width of trace from GND plane on same layer.

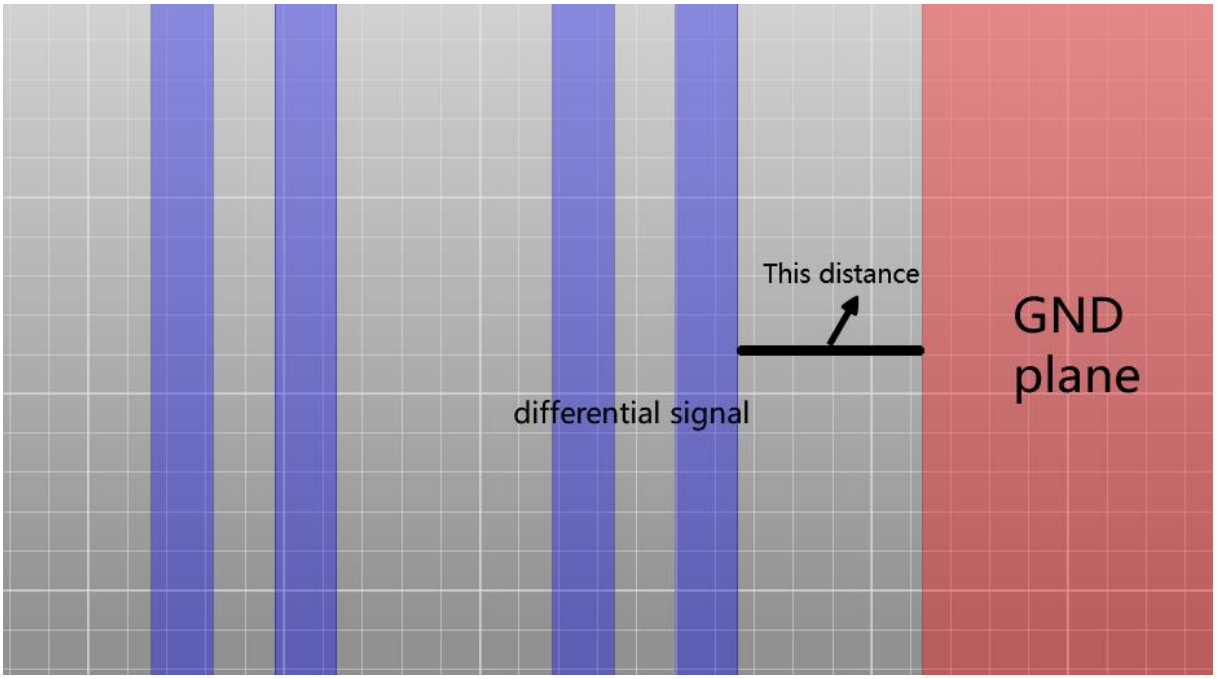

Figure 6

(6) voiding the Ground plane underneath the ESD or common mode inductance pads is

Copyright © 2021 Rockchip Electronics Co., Ltd.

necessary to minimize the impedance mismatch.

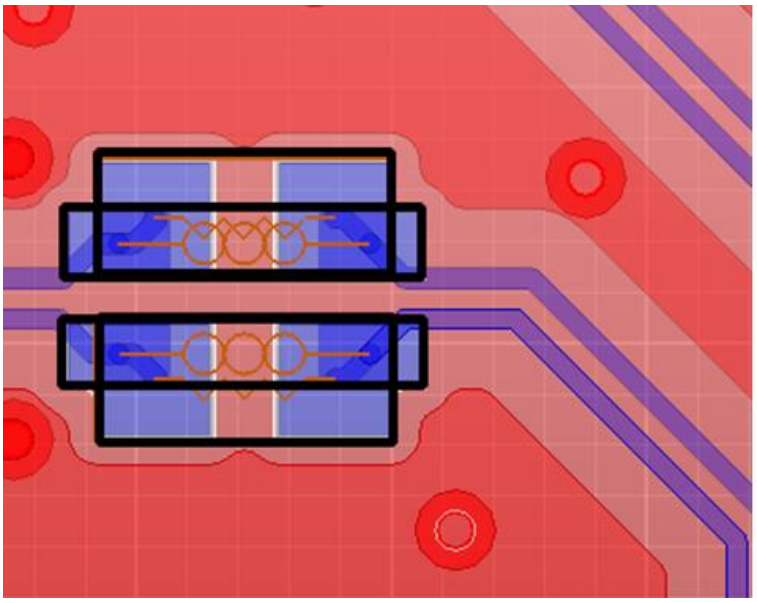

Figure 7

(7) Via stub effect needs to be considered, for example Figure 9 design via stub is shorter then Figure 8 design. If the length of the via stub is more than 12mil, it is recommended to perform simulation to evaluate the impact of via stub.

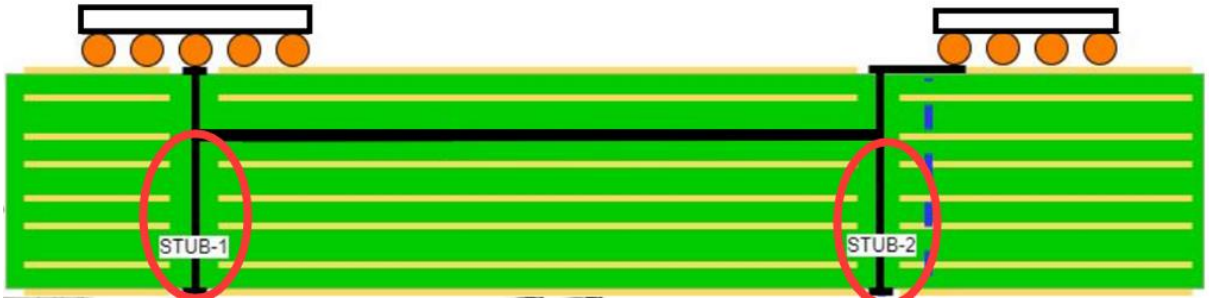

Figure 8

Figure 9

Copyright © 2021 Rockchip Electronics Co., Ltd.

(8) Avoid routing high-speed signals on the edge of reference planes or close to PCB borders. Otherwise, this can adversely affect the trace impedance. Recommend that high-speed differential signals are routed ≥ 40 mils from the edge of the reference plane.

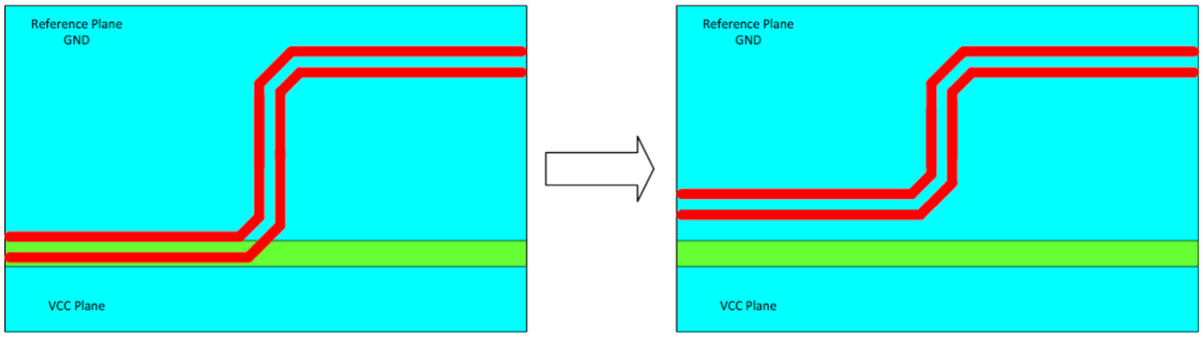

Figure10

(9) Voiding the Ground plane underneath the AC coupling capacitors pads is necessary to minimize the impedance mismatch.

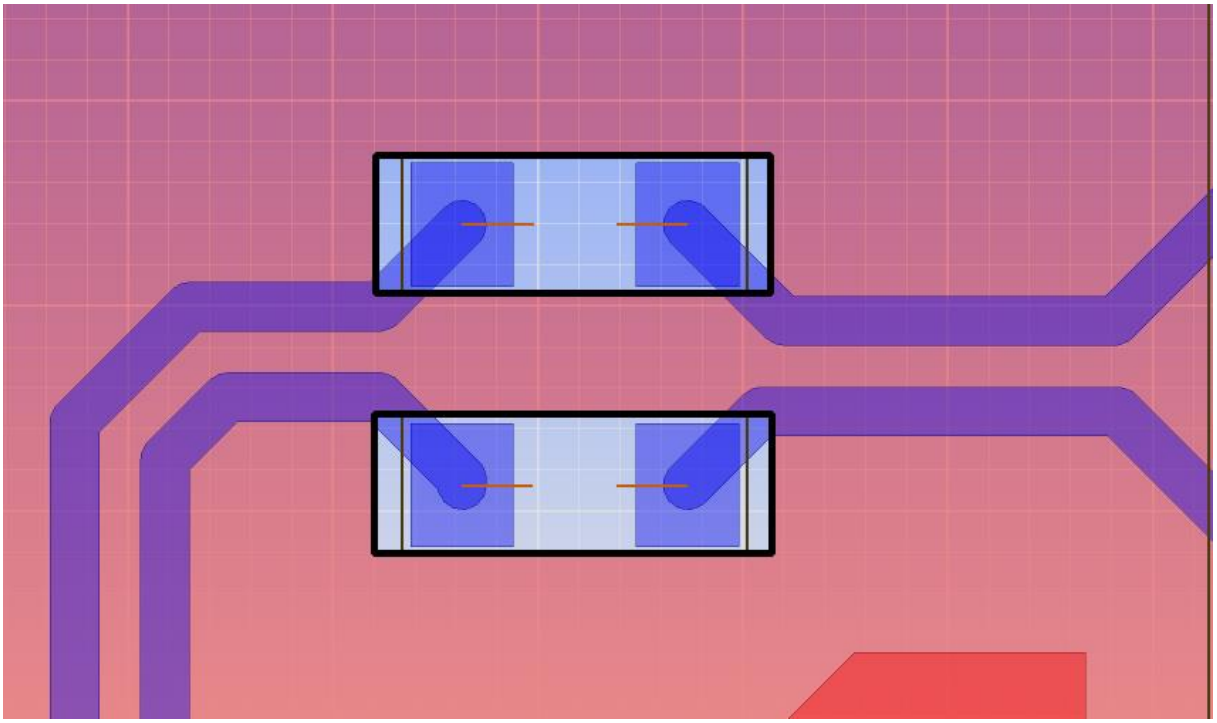

Figure 11

(10)Typical for ≥5GT/s, Trace routes over long distances(≥4inches) recommend consider Fiber weave Effect. As Figure 12 below, the 2 halves of a differential pair see different effective dielectric constants (and corresponding velocities)due to the difference in Er of the Fiberglass Weave and Epoxy. 10 degree Zigzag routing is recommended.

Copyright © 2021 Rockchip Electronics Co., Ltd.

Figure 12

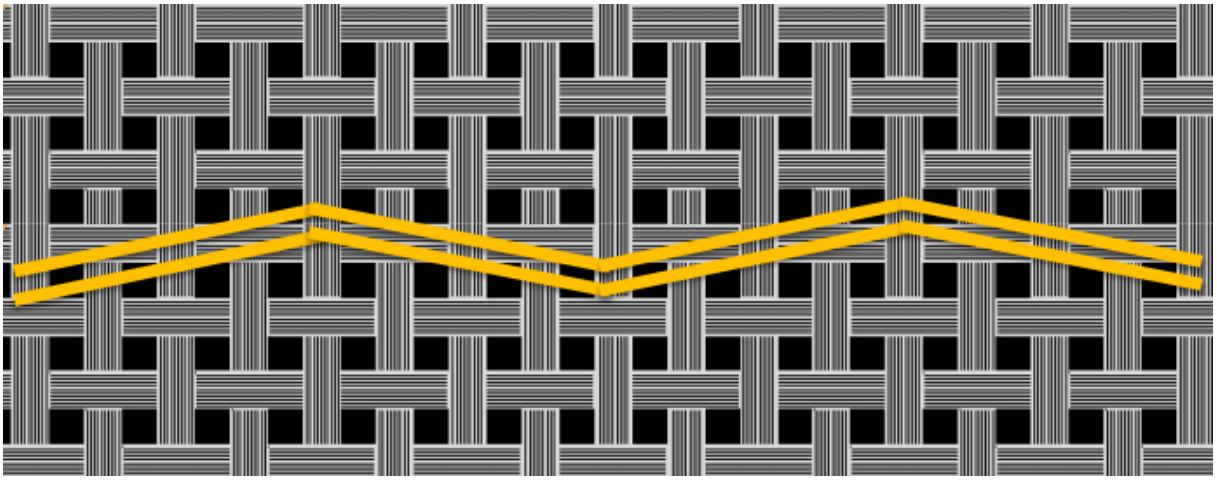

Figure 13

(11) Do not route traces under or near crystals, oscillators, clock signal generators, switching regulators, mounting holes, magnetic devices or IC's that use or duplicate clock signals.

(12) Do not place any test points on high-speed differential signals.

(13) When routing high-speed signals, bends should be minimized. If bends are needed, use 135° bends instead of 90°.

(14) AC coupling capacitors is recommended to be placed close to the connector.

Copyright © 2021 Rockchip Electronics Co., Ltd.

1.1 USB 2.0

Table 1:USB 2.0 Layout Requirements

Parameter	Requirement
Trace Impedance	90Ω ±10% differential
Max intra-pair skew	<20mil
Max trace length on carrier board	<6 inches
Maximum allowed via	Recommend less than 4 vias Cannot exceed 6 vias

1.2 USB 3.0

Table 2:USB 3.0 Layout Requirements

Parameter	Requirement
Trace Impedance	90Ω ±10% differential
Max intra-pair skew	<12mil
Max trace length on carrier board	<6 inches
AC coupling capacitors	100nF ±20%, discrete 0201 package preferable
Minimum pair to pair spacing	≥4 times the width of USB trace.
The minimum spacing between USB and other Signals	≥4 times the width of USB trace.
Maximum allowed via	Recommend less ≤ 2 vias

Copyright © 2021 Rockchip Electronics Co., Ltd.

1.3 SATA 3.0

Table 3:SATA 3.0 Layout Requirements

Parameter	Requirement
Trace Impedance	100Ω ±10% differential
Max intra-pair skew	<12mil
Max trace length on carrier board	<6 inches
AC coupling capacitors	10nF ±20%, discrete 0201 package preferable
Minimum pair to pair spacing	≥4 times the width of SATA trace.
The minimum spacing between SATA and other Signals	≥4 times the width of SATA trace.
Maximum allowed via	Recommend≤ 2 vias

1.4 HDMI 2.0

Table 4:HDMI 2.0 Layout Requirements

Parameter	Requirement
Trace Impedance	100Ω ±10% differential
Max intra-pair skew	<12mil
Max mismatch between clock and data pairs	<480mil
Max trace length on carrier board	<6 inches
Minimum pair to pair spacing	recommend≥5 times the width of HDMI trace. At least 4 times the width of HDMI trace. Try to increase spacing between pairs whenever it is possible.
The minimum spacing between HDMI and other Signals	recommend≥5 times the width of HDMI trace. At least 4 times the width of HDMI trace.
Maximum allowed via	Recommend ≤ 2 vias

Copyright © 2021 Rockchip Electronics Co., Ltd.

1.5 PCIE 2.0

Table 5:PCIE 2.0 Layout Requirements

Parameter	Requirement
Trace Impedance of Data	85Ω ±10% differential
Max intra-pair skew	<12mil
Max inter-pair skew	<6inches
Maximum signal line length (coupled traces) TX and RX	<6 inches
AC coupling capacitors	100nF ±20%, discrete 0201 package preferable
Minimum pair to pair spacing	≥4 times the width of the trace. Try to increase spacing between pairs whenever it is possible.
Max mismatch between REFCLK+ and REFCLK-	<12mil
Trace Impedance of REFCLK	100 ±10% differential
The minimum spacing between PCIE and other Signals	recommend≥5 times the width of PCIE trace. At least 4 times the width of PCIE trace.
Maximum allowed via	Recommend ≤ 2 vias

Copyright © 2021 Rockchip Electronics Co., Ltd.

1.6 PCIE 3.0

Table 6:PCIE 3.0 Layout Requirements

Parameter	Requirement
Trace Impedance	85Ω ±10% differential
Max intra-pair skew	<12mil
Max inter-pair skew	<6inches
Maximum signal line length (coupled traces) TX and RX	<6 inches
AC coupling capacitors	220nF ±20%, discrete 0201 package preferable
Minimum pair to pair spacing	Recommend≥5 times the width of the trace. Try to increase Spacing between pairs whenever it is possible.
Max mismatch between REFCLK+ and REFCLK-	<12mil
Trace Impedance of REFCLK	100 ±10% differential
The minimum spacing between PCIE and other Signals	recommend≥5 times the width of PCIE trace.
Maximum allowed via	Recommend ≤ 2 vias

Note: Because PCIE3.0 rate is reach 8Gbps, recommend to do simulation after layout.

Copyright © 2021 Rockchip Electronics Co., Ltd.

1.7 EDP

Table 7:EDP Layout Requirements

Parameter	Requirement
Trace Impedance	100Ω ±10% differential
Max intra-pair skew	<12mil
Max trace length on carrier board	<6 inches
Minimum pair to pair spacing	recommend≥4 times the width of EDP trace. At least 3times the width of EDP trace Try to increase spacing between pairs whenever it is possible.
AC coupling capacitors	100nF ±20%, discrete 0201 package preferable
The minimum spacing between EDP and other Signals	≥4 times the width of EDP trace.
Maximum allowed via	Recommend ≤ 4 vias

1.8 QSGMII/SGMII

Table 8: QSGMII/SGMII Layout Requirements

Parameter	Requirement
Trace Impedance	100Ω ±10% differential
Max intra-pair skew	<12mil
Max trace length on carrier board	<6 inches
Minimum pair to pair spacing	Recommend≥4 times the width of QSGMII/SGMII trace. Try to increase Spacing between pairs whenever it is possible.
AC coupling capacitors	100nF ±20%, discrete 0201 package preferable
The minimum spacing between	Recommend≥ 4 times the width of

Copyright © 2021 Rockchip Electronics Co., Ltd.

QSGMII/SGMII and other Signals	QSGMII/SGMII trace.
Maximum allowed via	Recommend ≤ 2 vias

1.9 LVDS

Table 9: LVDS Layout Requirements

Parameter	Requirement
Trace Impedance	100Ω ±10% differential
Intra-pair length matching	<20mil
Max length matching skew between clock and data pairs	60mil
Max trace length	6 inches
Maximum allowed via	Recommend less than 4 vias Cannot exceed 6 vias
Minimum pair to pair spacing	Recommend ≥3 times the width of LVDS trace. Try to increase spacing between pairs whenever it is possible.

1.10 MIPI

Table 10: MIPI Layout Requirements

Parameter	Requirement
Trace Impedance	100Ω ±10% differential
Max intra-pair skew	<12mil
Data to clock mismatch	<36mil
Max trace length	<6 inches
Maximum allowed via	4
Minimum pair to pair spacing	Recommend ≥3 times the width of MIPI trace. Try to increase Spacing between pairs whenever it

Copyright © 2021 Rockchip Electronics Co., Ltd.

	is possible.
The minimum spacing between MIPI and other Signals	Recommend ≥3 times the width of MIPI trace.

1.11 SDIO

Table 11: SDIO Layout Requirements

Parameter	Requirement
Trace Impedance	50Ω ±10% single ended
Data to clock mismatch	<120mil
Max trace length	When data rate ≤50Mbps, Max trace length <6 inches. When data rate >50Mbps, Max trace length <4 inches.
The minimum spacing of SDIO Signals	At least 2 times the width of SDIO trace.
Maximum allowed via	Recommend ≤4 vias

1.12 SDMMC

Table 12: SDMMC Layout Requirements

Parameter	Requirement
Trace Impedance	50Ω ±10% single ended
Data to clock mismatch	<120mil
Max trace length	When data rate ≤50Mbps, Max trace length <6 inches. When data rate >50Mbps, Max trace length <4 inches.
The minimum spacing of SDMMC Signals	At least 2 times the width of SDMMC trace.
Maximum allowed via	Recommend ≤4 vias

Copyright © 2021 Rockchip Electronics Co., Ltd.

1.13 eMMC

Table 13: eMMC Layout Requirements

Parameter	Requirement
Trace Impedance	50Ω ±10% single ended
Data to clock matching	<120mil
Max trace length	<4 inches
The minimum spacing of eMMC Signals	At least 2 times the width of eMMC trace.
The minimum spacing between eMMC and other Signals	Recommend 3 times the width of eMMC trace. At least 2 times the width of eMMC trace.
Maximum allowed via	Recommend ≤4 vias

1.14 FSPI

Table 14: FSPI Layout Requirements

Parameter	Requirement
Trace Impedance	50Ω ±10% single ended
Data to clock mismatch	<200mil
Max trace length	<4 inches
The minimum spacing of FSPI Signals	At least 2 times the width of FSPI trace.

1.15 NAND FLASH

Table 15: NAND FLASH Layout Requirements

Parameter	Requirement
Trace Impedance	50Ω ±10% single ended
signals mismatch	<200mil

Copyright © 2021 Rockchip Electronics Co., Ltd.

Max trace length	4 inches
The minimum spacing of NAND FLASH Signals	Recommend 2 times the width of FLASH trace.

1.16 LCDC

Table 16: LCDC Layout Requirements

Parameter	Requirement
Trace Impedance	50Ω ±10% single ended
Data to clock mismatch	<180mil
Max trace length	<5 inches
The minimum spacing of LCDC Signals	Recommend 2 times the width of LCDC trace.

1.17 BT1120

Table 17: BT1120 Layout Requirements

Parameter	Requirement
Trace Impedance	50Ω ±10% single ended
Data to clock mismatch	<180mil
Max trace length	<5 inches
The minimum spacing of BT1120 Signals	Recommend 2 times the width of BT1120 trace.

1.18 BT656

Table 18: BT656 Layout Requirements

Parameter	Requirement
Trace Impedance	50Ω ±10% single ended
Data to clock mismatch	<180mil
Max trace length	<5 inches
The minimum spacing of BT656 Signals	Recommend 2 times the width of BT656 trace.

Copyright © 2021 Rockchip Electronics Co., Ltd.

1.19 RGMII

Table 19: RGMII Layout Requirements

Parameter	Requirement
Trace Impedance	50Ω ±10% single ended
(TXD0,TXD1,TXD2,TXD3,TXEN) to TXCLK mismatch	<120mil
(RXD0,RXD1,RXD2,RXD3,RXDV) to RXCLK mismatch	<120mil
Max trace length	<5 inches
The minimum spacing of RGMII Signals	At least 2 times the width of RGMII trace.
The minimum spacing between RGMII and other Signals	Recommend 3 times the width of RGMII trace. At least 2 times the width of RGMII trace.

Copyright © 2021 Rockchip Electronics Co., Ltd.

As DDR rate reaches 3200Mbps, PCB design becomes more and more difficult. It is strongly require to use Rock-chips Demo PCB and corresponding Software .Our demo PCB have been simulated and verified before released. If you do not use Demo PCB ,you should simulate PCB by yourself. There are some useful guidelines for DDR design.

(1)CPU side GND ball should have enough vias as below

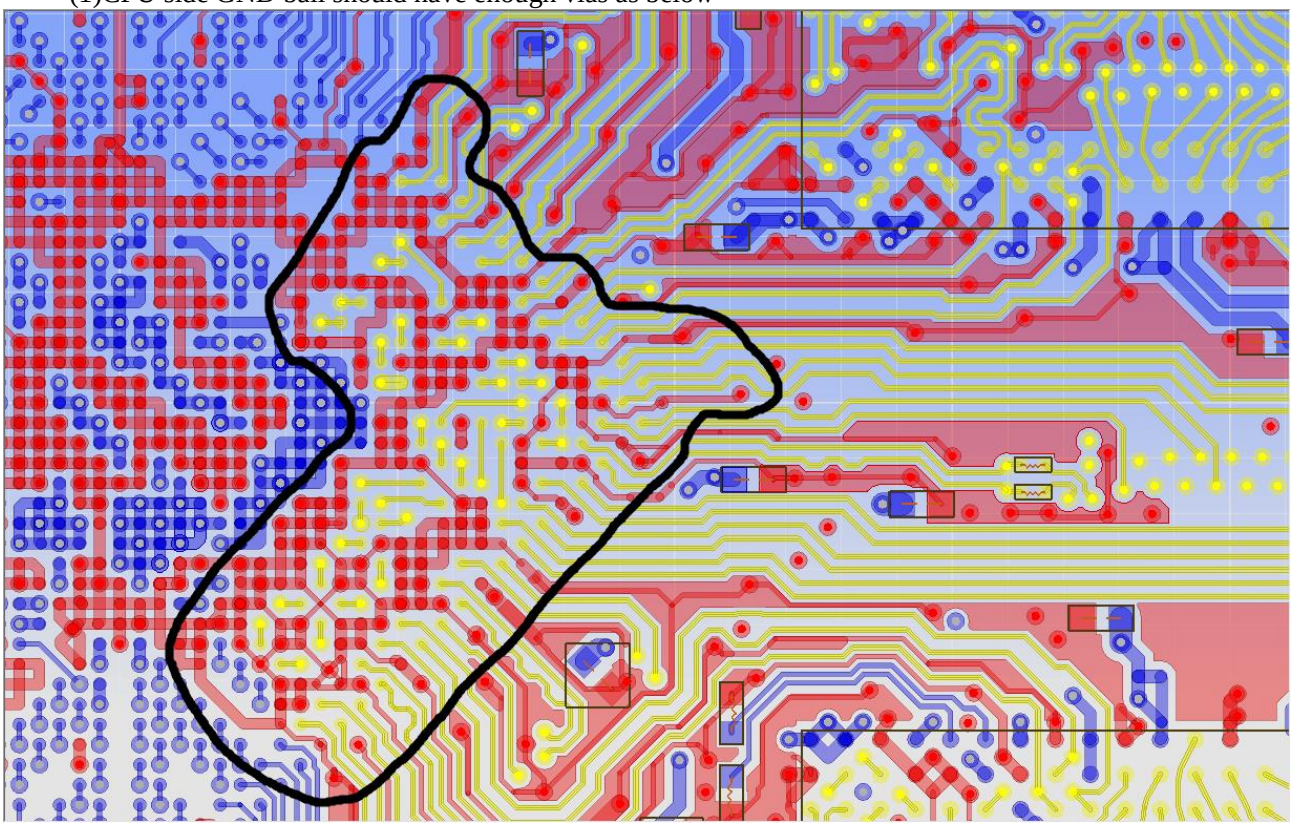

Figure 14

(2)If a signal trace switches layer and the reference plane is GND, stitching GND vias should to be added close to the layer change vias within 25 mils.

Copyright © 2021 Rockchip Electronics Co., Ltd.

Figure 15

(3)One via per power pad of Dram chip.

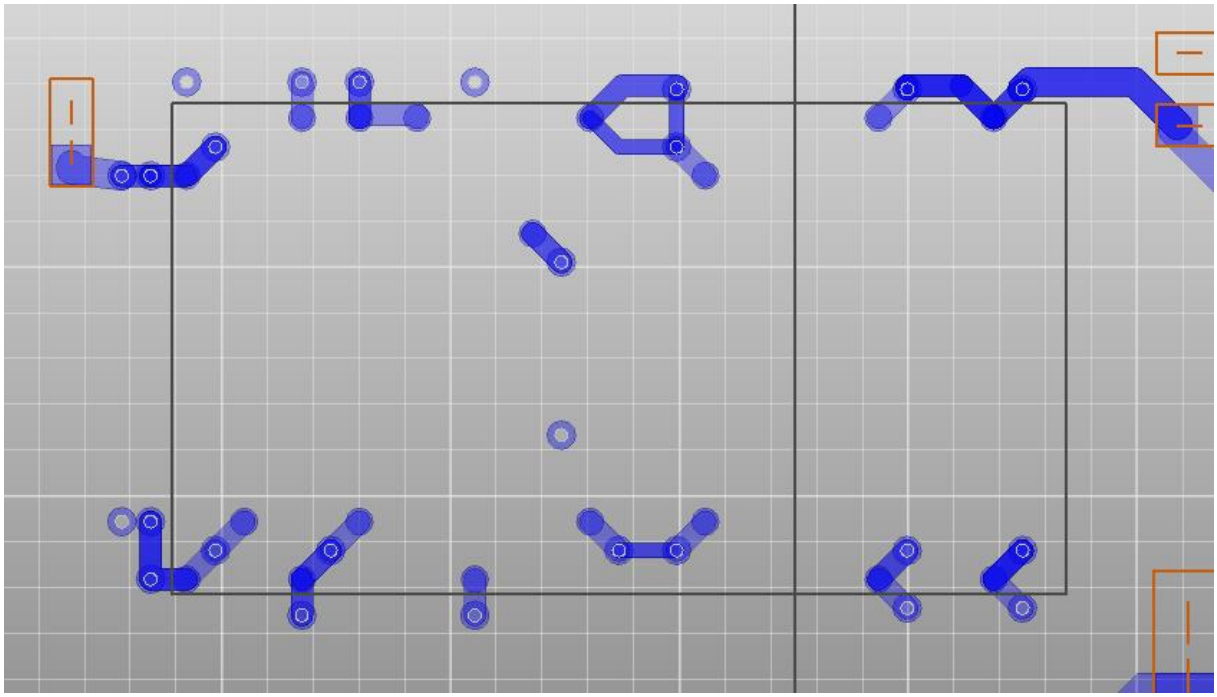

Figure 16

Copyright © 2021 Rockchip Electronics Co., Ltd.

(4)One via per GND pad of Dram chip.

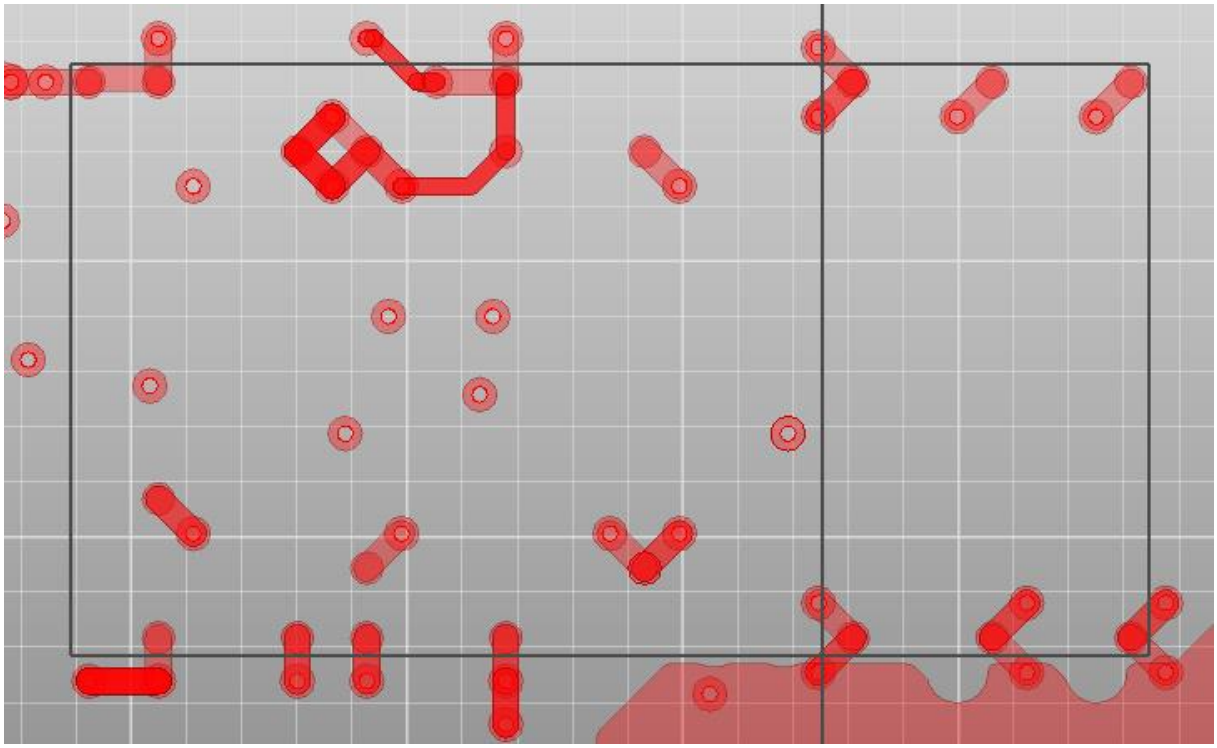

Figure 17

(5)VCC_DDR power net should have ≧6vias at DCDC output.

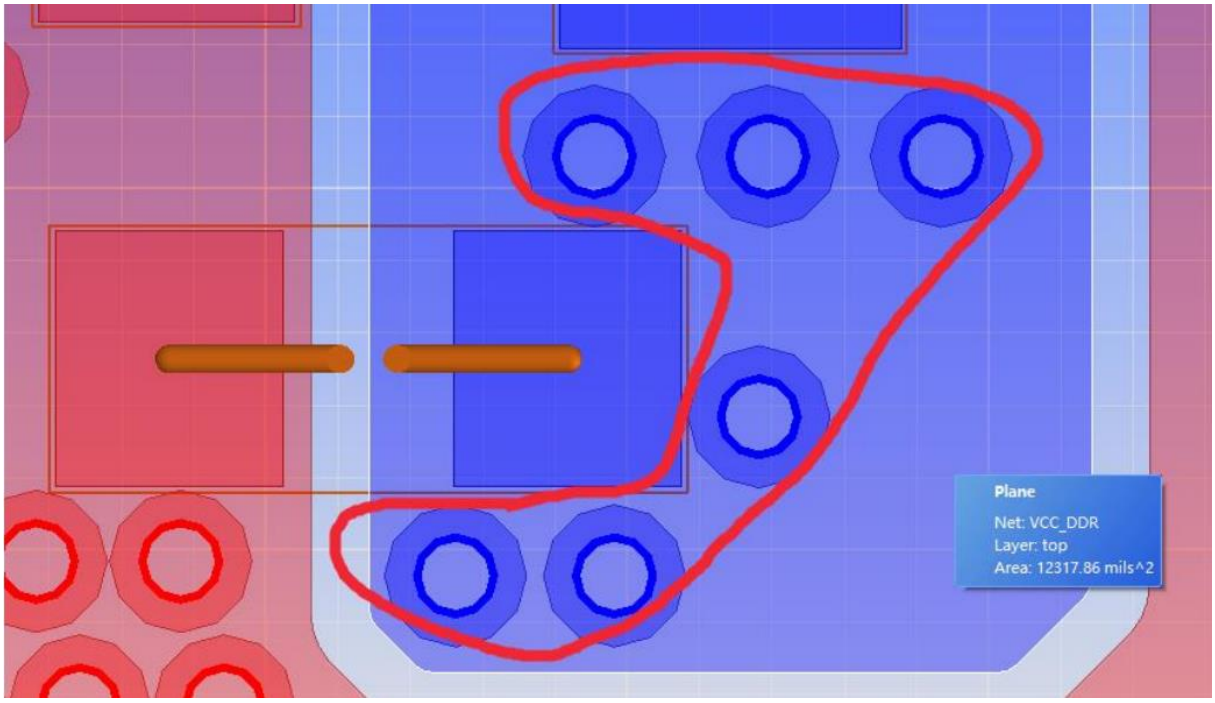

Figure 18

Copyright © 2021 Rockchip Electronics Co., Ltd.

(6)One via per power pad of Capacitor. One via per GND pad of Capacitor.

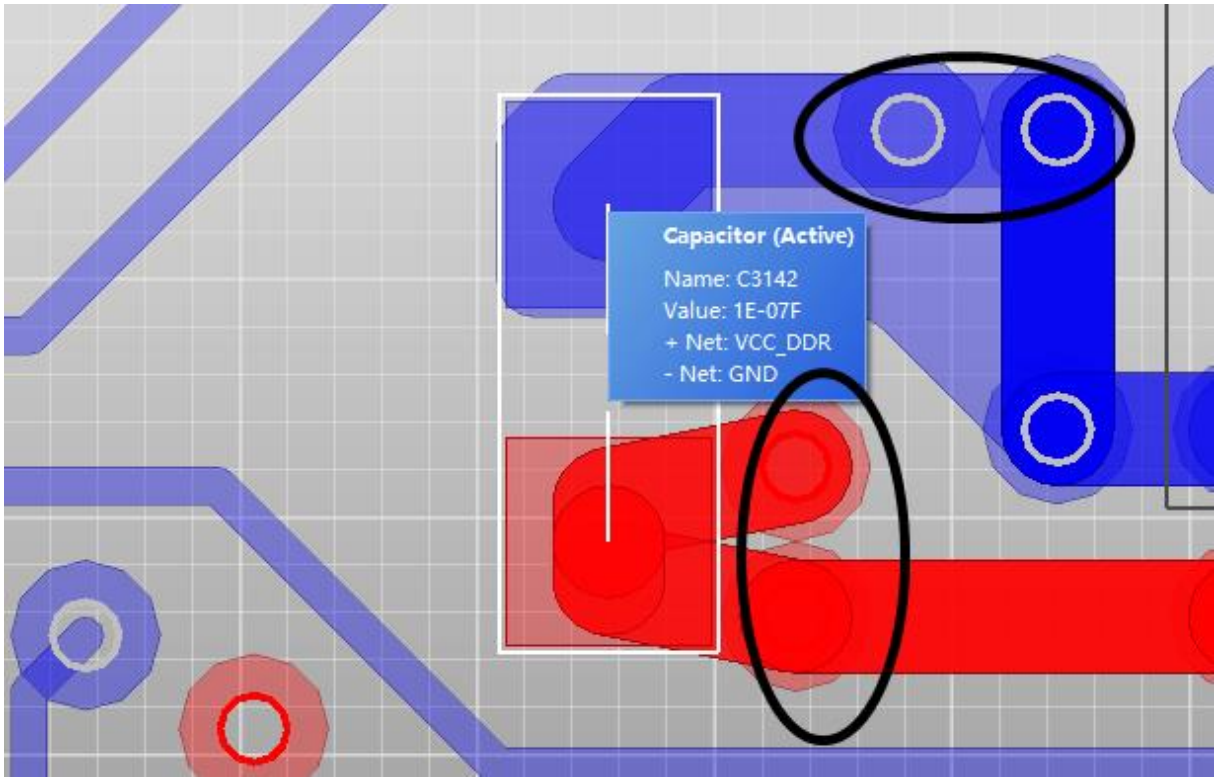

Figure 19

(7)Avoid return path discontinuities such as a slit.

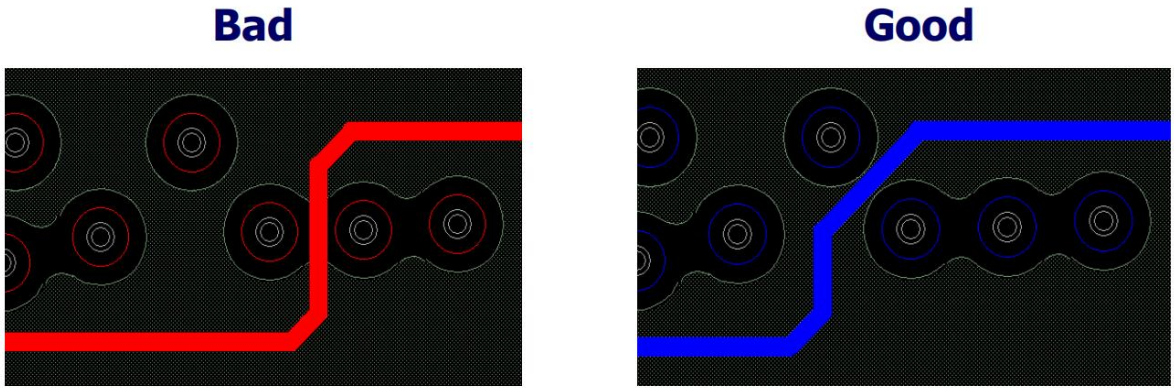

Figure 20

(8)If a signal trace switches layer , the reference plane change from GND to Power or from Power to GND. 100nF stitching Capacitor recommend to be added close to the layer change vias. recommand 3 ~4 signal vias have one stiching Capacitor.

Copyright © 2021 Rockchip Electronics Co., Ltd.

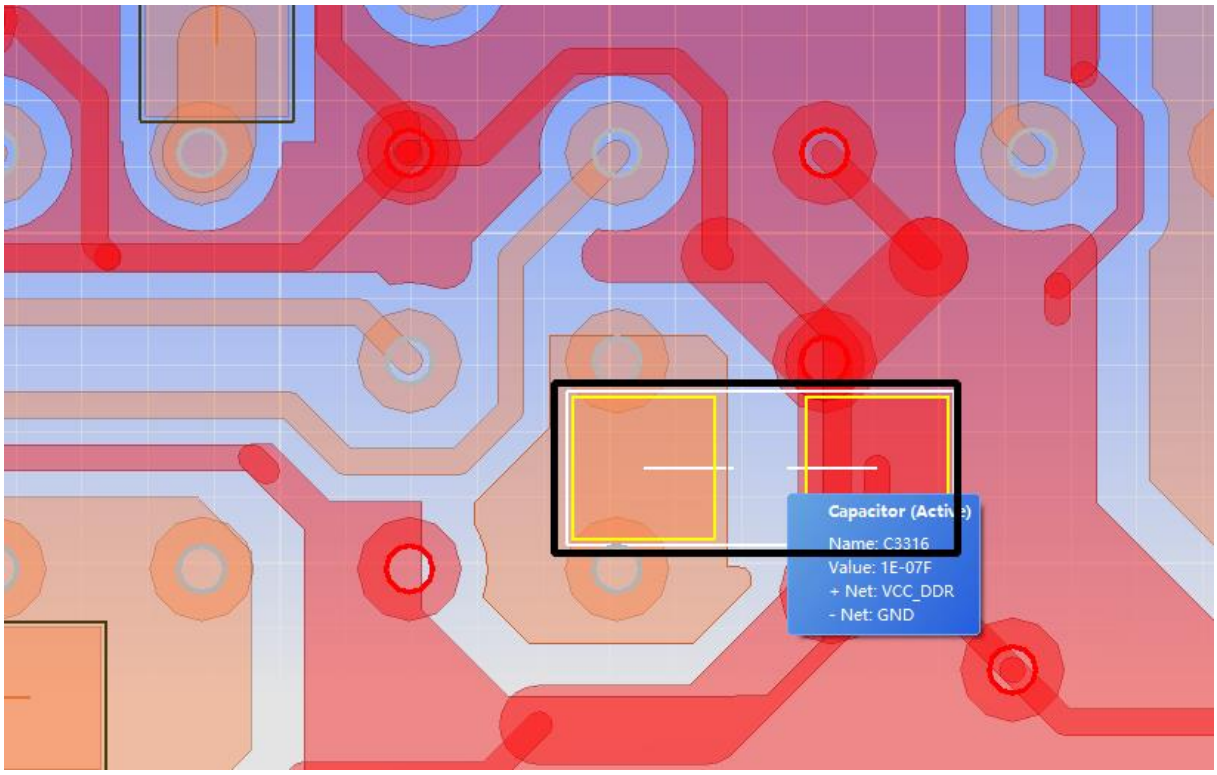

Figure 21

(9)Route trace far away (≧6mil)from the via hole or via pad.

(10)Remove unused via pads ,because they cause unwanted capacitance and destroy plane.

(11) If a signal trace switches layer on four layer PCB, add GND line with GND vias along the signal path, will improve signal return path.

Copyright © 2021 Rockchip Electronics Co., Ltd.

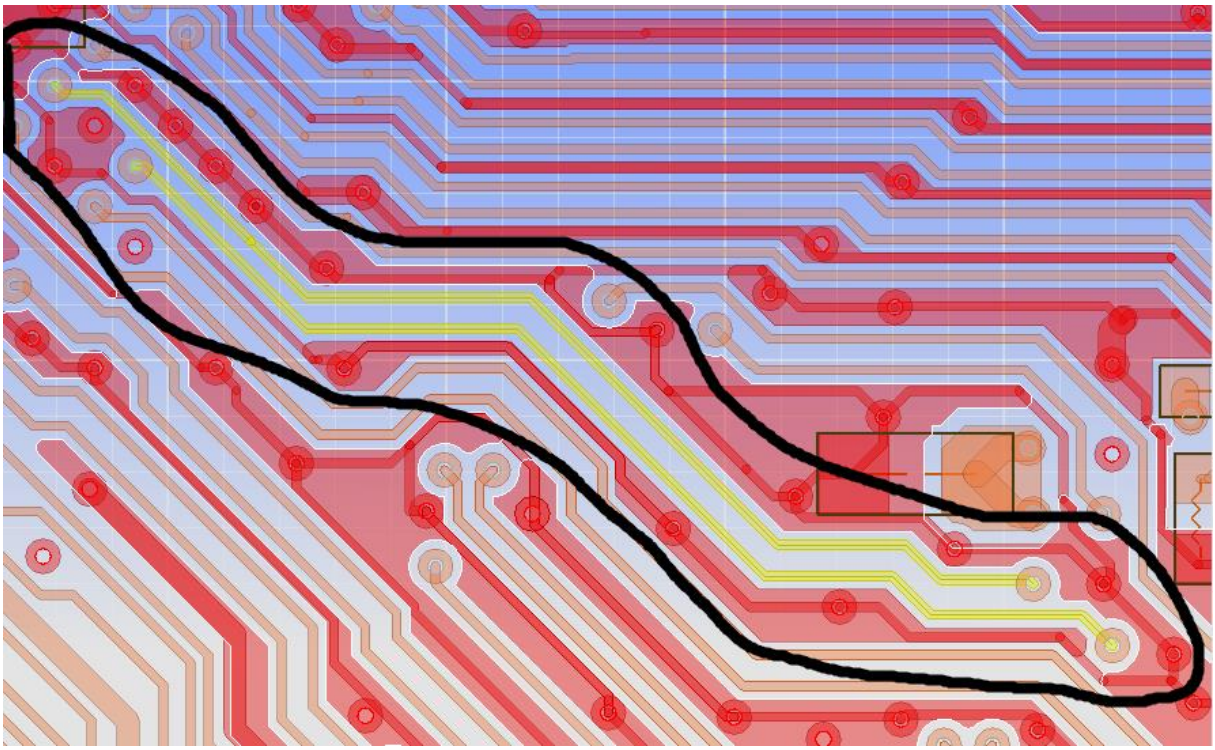

Figure 22

(12)For balanced T-branch configuration, trace lengths(L2, L3) shall be kept as short as possible . Trace length of L2 and L3 shall be equal as possible. It will improve signal integrity.

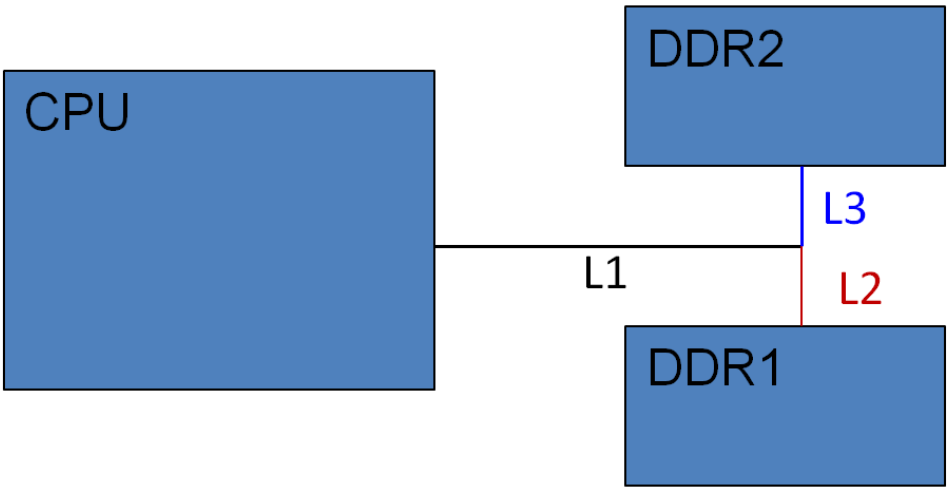

Figure 23

(13) Recommend that signals are routed ≥12 mils from the edge of the reference plane.

Copyright © 2021 Rockchip Electronics Co., Ltd.

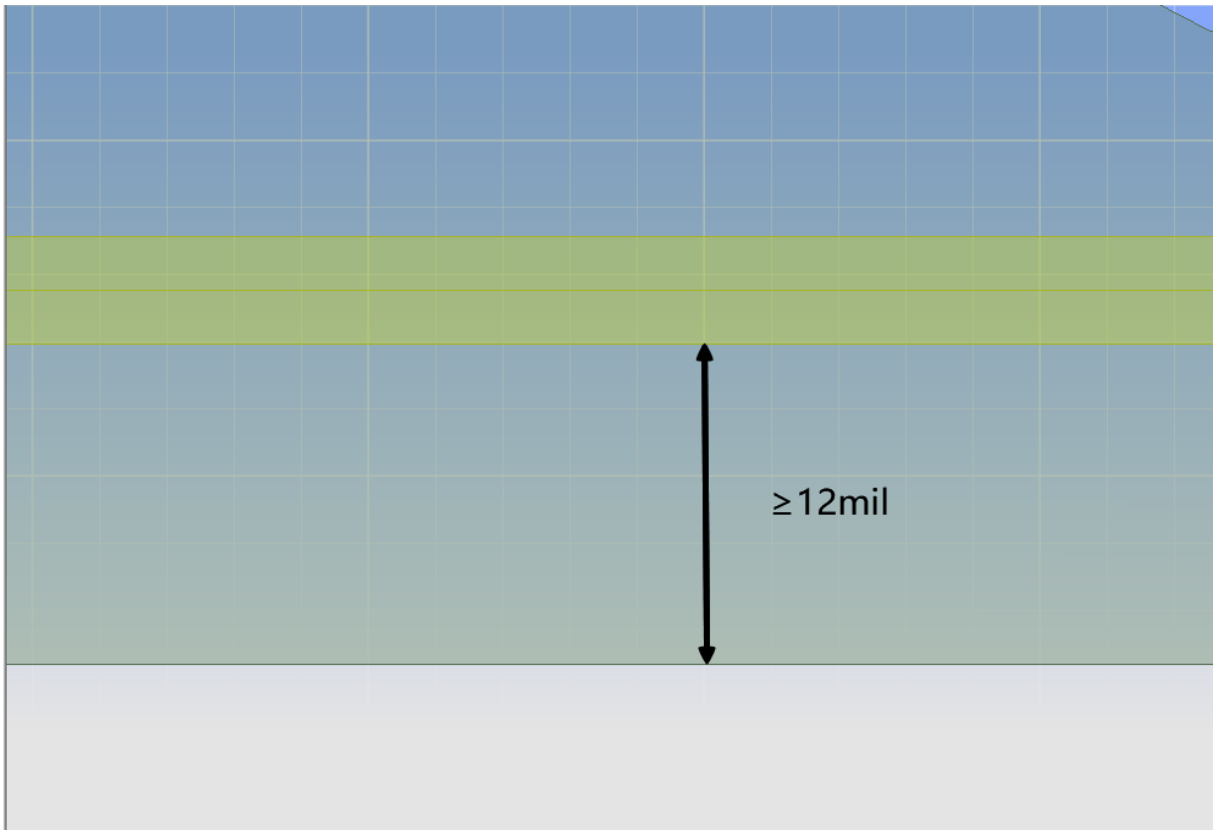

Figure 24

(14)For DDR3,LPDDR3,DDR4,LPDDR4, CPU side VCC_DDR balls should have enough vias (recommend≥12 vias).

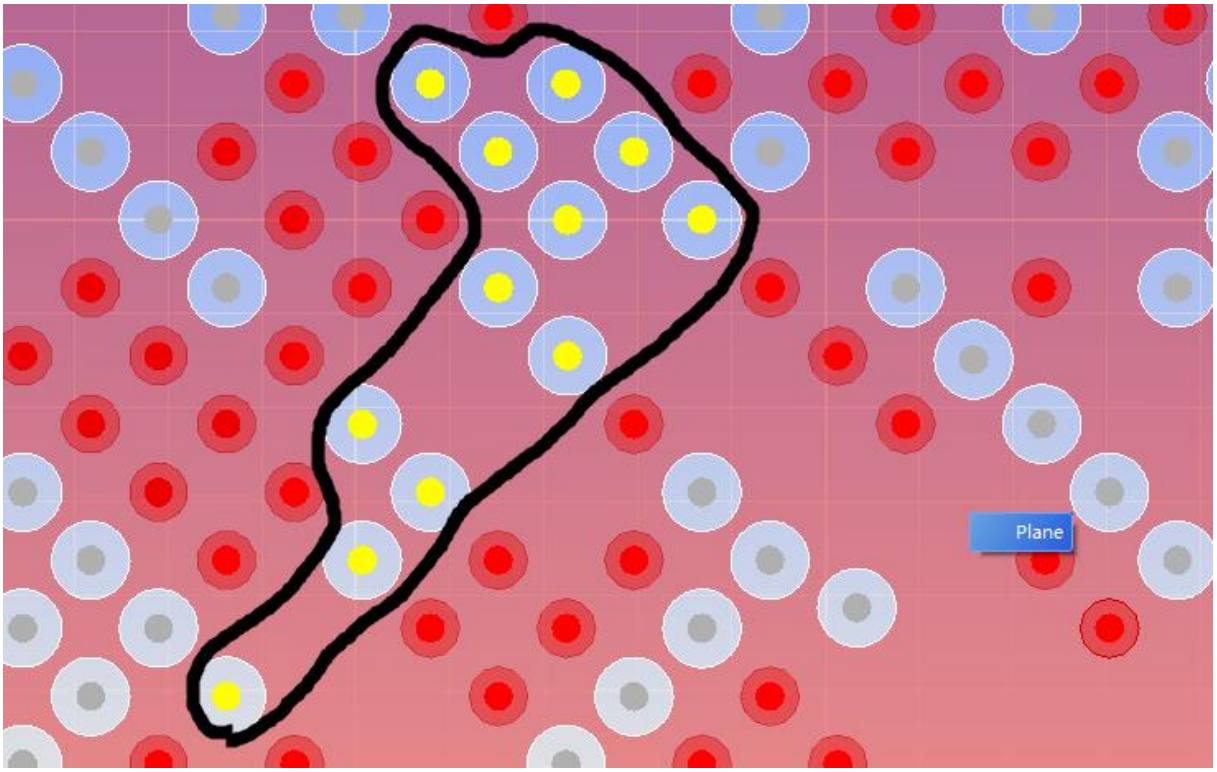

Figure 25

Copyright © 2021 Rockchip Electronics Co., Ltd.

(15) For LPDDR4x CPU side ,VCC_DDR balls should have enough vias (recommend ≥8vias) ,VCC0V6_DDR balls should have enough vias (recommend ≥ 6 vias).

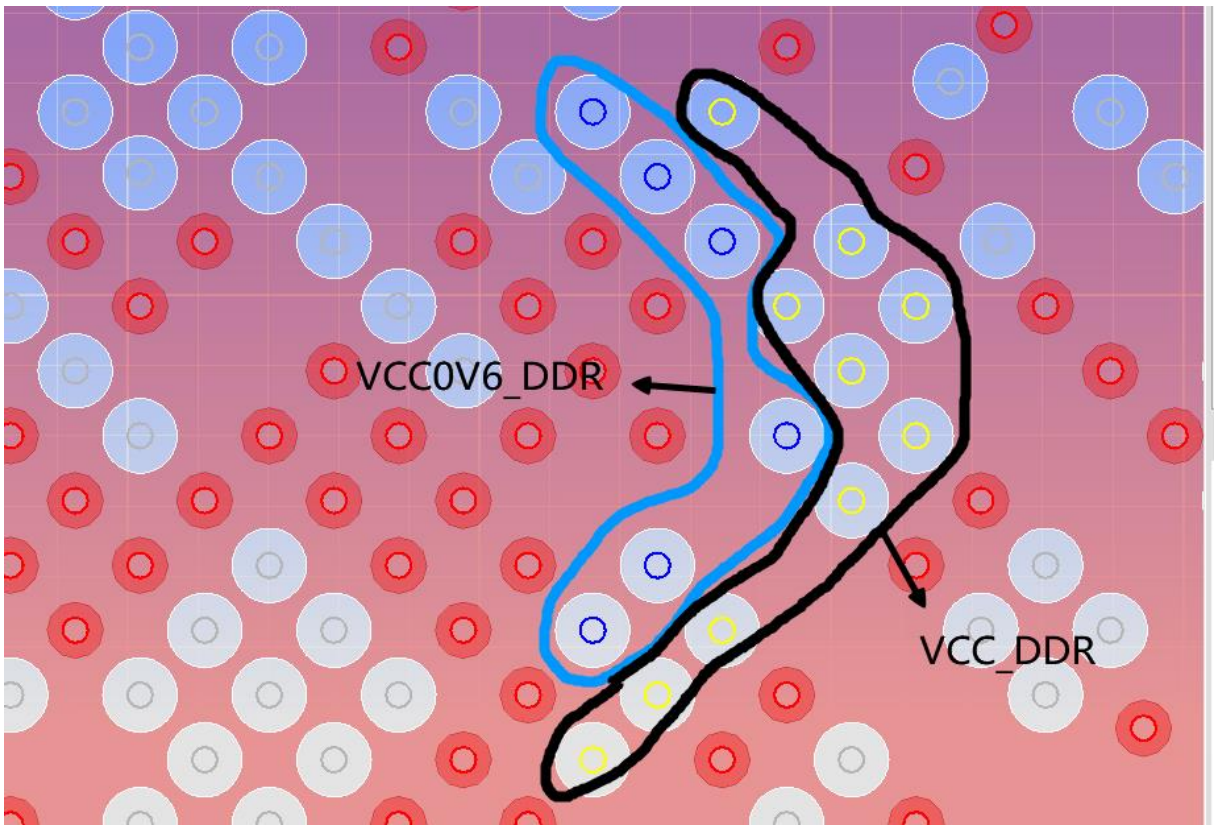

Figure 26

(16) For Fly_by topology, R1 recommend 39ohm or 43ohm. BI1 trace length shall be kept as short as possible .

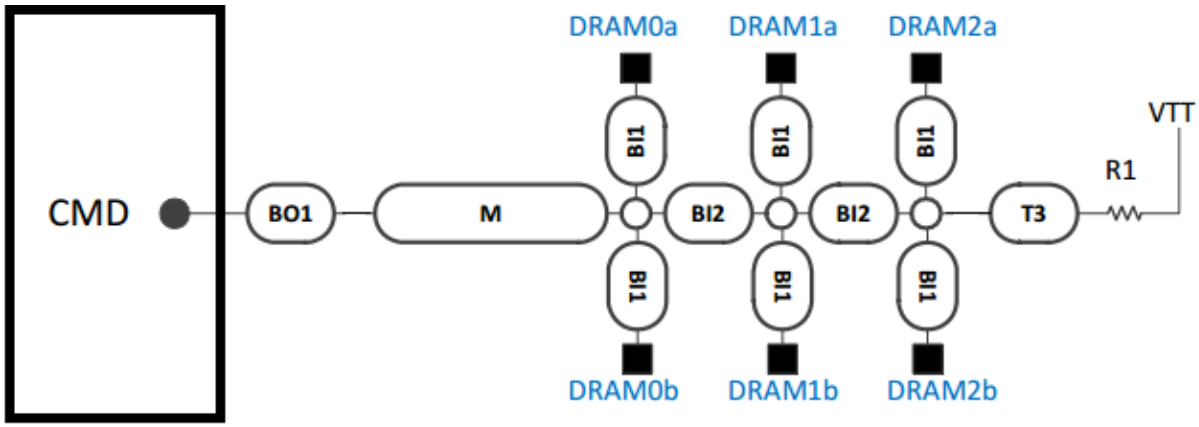

Figure 27

1.20 LPDDR3

Table 20: LPDDR3 Layout Requirements

Parameter	Requirement
single-ended impedance	50 Ohm ±10%
Differential impedance	100 Ohm ±10%
Length between DQ and DQS (within a byte)	under 600mil DQ no need to match length of DQS. Make sure DQ length as short as possible.
Length between DM and DQS (within a byte)	under 600mil DM no need to match length of DQS. Make sure DM length as short as possible.
（Command /Address ）to CLK mismatch	under 30mil
DQS_P to DQS_N mismatch (within a byte)	under 12mil
CLK_P to CLK_N mismatch	under 12mil
DQS to CLK mismatch	under 1500mil
Byte-to-byte spacing	≥2 times the width of the trace
DQ to DQ spacing within a byte	≥2 times the width of the trace
DQ to DQS spacing within a byte	Recommend≥3 times the width of the trace At least 2 times the width of the trace
（Command /Address ） to （Command / Address ） spacing	≥2 times the width of the trace
CLK to all other traces spacing	Recommend≥3 times the width of the trace At least 2 times the width of the trace

Copyright © 2021 Rockchip Electronics Co., Ltd.

1.21 DDR3

Data Signal Routing Topology:

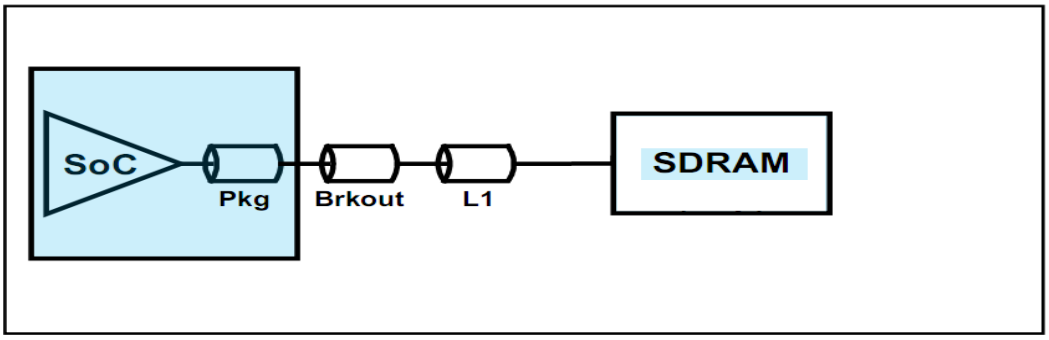

Table 21: DDR3 Data signal Layout Requirements

Parameter	Requirement
single-ended impedance	50 Ohm ±10%
Differential impedance	100 Ohm ±10%
Length between DQ and DQS (within a byte)	under 600mil DQ no need to match length of DQS. Make sure DQ length as short as possible.
Length between DM and DQS (within a byte)	under 600mil DM no need to match length of DQS. Make sure DM length as short as possible.
DQS_P to DQS_N mismatch (within a byte)	under 12mil
CLK_P to CLK_N mismatch	under 12mil
DQS to CLK mismatch	under 1500mil
Byte-to-byte spacing	≥2 times the width of the trace
DQ to DQ spacing within a byte	≥2 times the width of the trace
DQ to DQS spacing within a byte	Recommend≥3 times the width of the trace At least 2 times the width of the trace
CLK to all other traces spacing	Recommend≥3 times the width of the trace At least 2 times the width of the trace

Copyright © 2021 Rockchip Electronics Co., Ltd.

Control Signal Routing Topology:

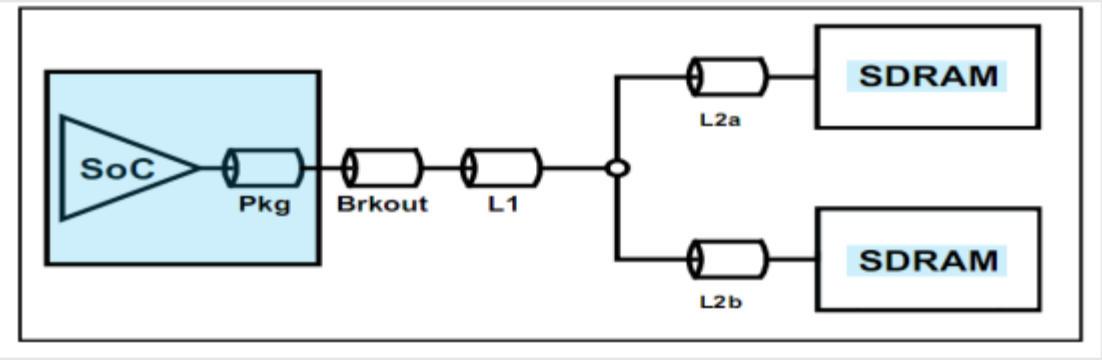

Table 22: DDR3 Control signal Layout Requirements

Parameter	Requirement
single-ended impedance	50 Ohm ±10%
Differential impedance	100 Ohm ±10%
（CSn,CKE,ODT signal）to CLK mismatch	under 30mil
（Command /Address ） to （Command / Address ） spacing	≥2 times the width of the trace
L2a to L2b mismatch	≤20mil
L2a length of CSn,CKE,ODT,CLK signal	≤600mil Make sure CSn,CKE,ODT,CLK signal length as short as possible.

Copyright © 2021 Rockchip Electronics Co., Ltd.

Command Signal Routing Topology:

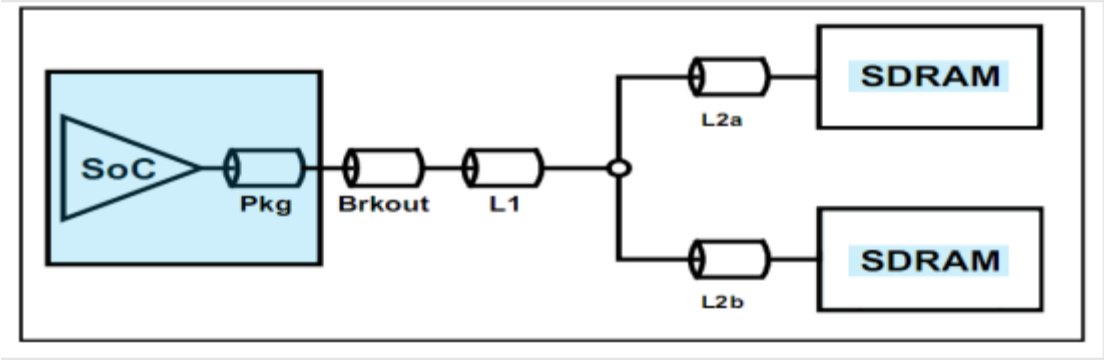

Table 23: DDR3 Command signal Layout Requirements

Parameter	Requirement
single-ended impedance	50 Ohm ±10%
Command signal to CLK mismatch of L1 part	under 600mil
（Command /Address ） to （Command / Address ） spacing	≥2 times the width of the trace
L2a to L2b mismatch	≤20mil
L2a length of Command signal	≤600mil Make sure Command signal length as short as possible.

Copyright © 2021 Rockchip Electronics Co., Ltd.

1.22 DDR3 ECC

Table 24: DDR3 ECC Data signal Layout Requirements

Parameter	Requirement
single-ended impedance	50 Ohm ±10%
Differential impedance	100 Ohm ±10%
Length between DQ and DQS (within a byte)	under 600mil DQ no need to match length of DQS. Make sure DQ length as short as possible.
Length between DM and DQS (within a byte)	under 600mil DM no need to match length of DQS. Make sure DM length as short as possible.
DQS_P to DQS_N mismatch (within a byte)	under 12mil
CLK_P to CLK_N mismatch	under 12mil
DQS to CLK mismatch	under 1500mil
Byte-to-byte spacing	≥2 times the width of the trace
DQ to DQ spacing within a byte	≥2 times the width of the trace
DQ to DQS spacing within a byte	Recommend≥3 times the width of the trace At least 2 times the width of the trace
CLK to all other traces spacing	Recommend≥3 times the width of the trace At least 2 times the width of the trace

Copyright © 2021 Rockchip Electronics Co., Ltd.

Control Signal Routing Topology:

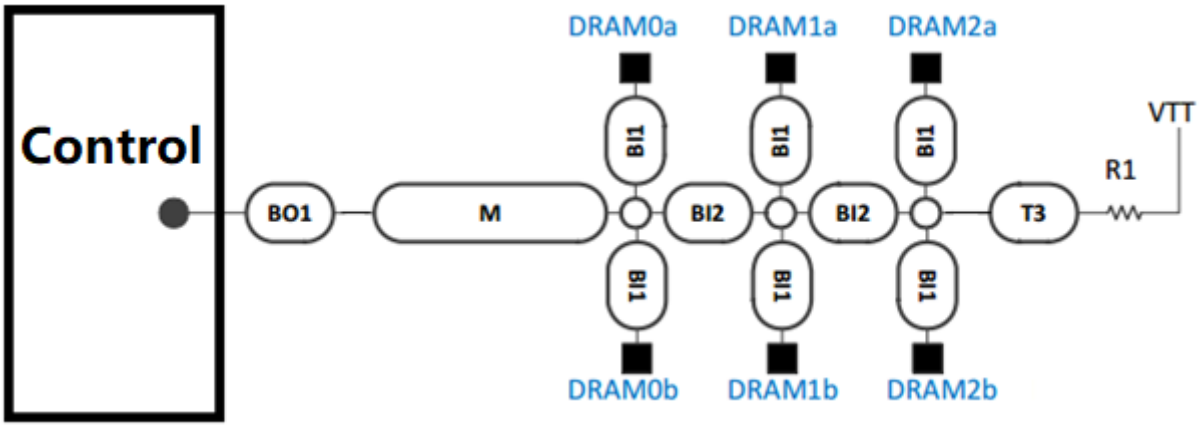

Table 25: DDR3 ECC Control signal Layout Requirements

Parameter	Requirement
M region single-ended impedance	43 Ohm ±10%
single-ended impedance except M region	50 Ohm ±10%
Differential impedance	100 Ohm ±10%
（CSn,CKE,ODT signal）to CLK mismatch	under 60mil
（Command /Address ） to （Command / Address ） spacing	≥2 times the width of the trace

Command Signal Routing Topology:

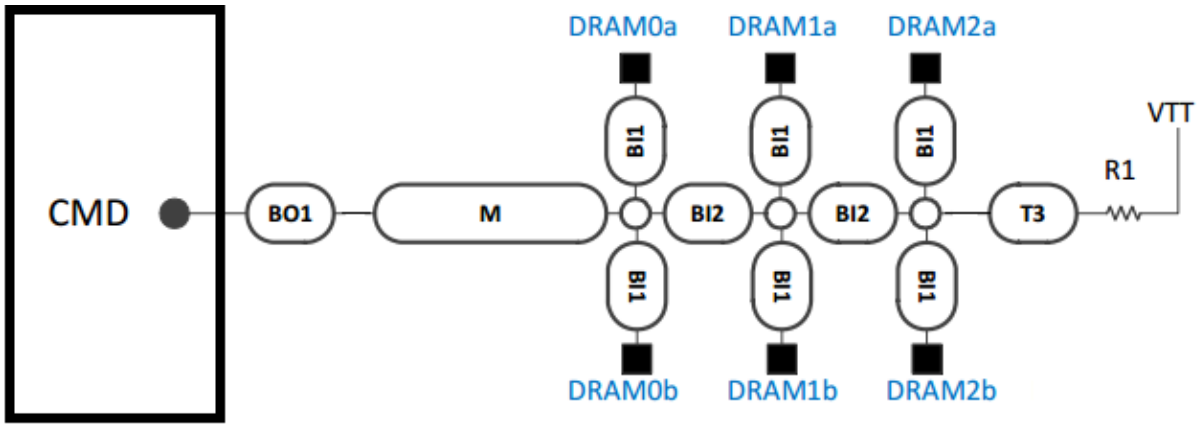

Table 26: DDR3 ECC Command signal Layout Requirements

Parameter	Requirement
M region single-ended impedance	50 Ohm ±10%
single-ended impedance except M region	50 Ohm ±10%
Command signal to CLK mismatch	under 600mil
（Command /Address） to （Command / Address） spacing	≥2 times the width of the trace

1.23 DDR4

Data Signal Routing Topology:

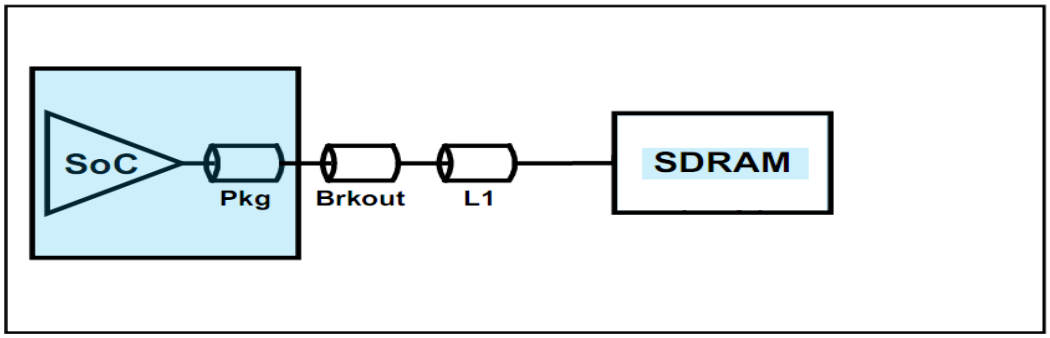

Table 27: DDR4 Data signal Layout Requirements

Parameter	Requirement
single-ended impedance	50 Ohm ±10%
Differential impedance	100 Ohm ±10%
Length between DQ and DQS (within a byte)	under 600mil DQ no need to match length of DQS. Make sure DQ length as short as possible.
Length between DM and DQS (within a byte)	under 600mil DM no need to match length of DQS. Make sure DM length as short as possible.
DQS_P to DQS_N mismatch (within a byte)	under 12mil
CLK_P to CLK_N mismatch	under 12mil
DQS to CLK mismatch	under 1500mil
Byte-to-byte spacing	≥2 times the width of the trace
DQ to DQ spacing within a byte	≥2 times the width of the trace
DQ to DQS spacing within a byte	Recommend≥3 times the width of the trace At least 2 times the width of the trace
CLK to all other traces spacing	Recommend≥3 times the width of the trace At least 2 times the width of the trace

Copyright © 2021 Rockchip Electronics Co., Ltd.

Control Signal Routing Topology:

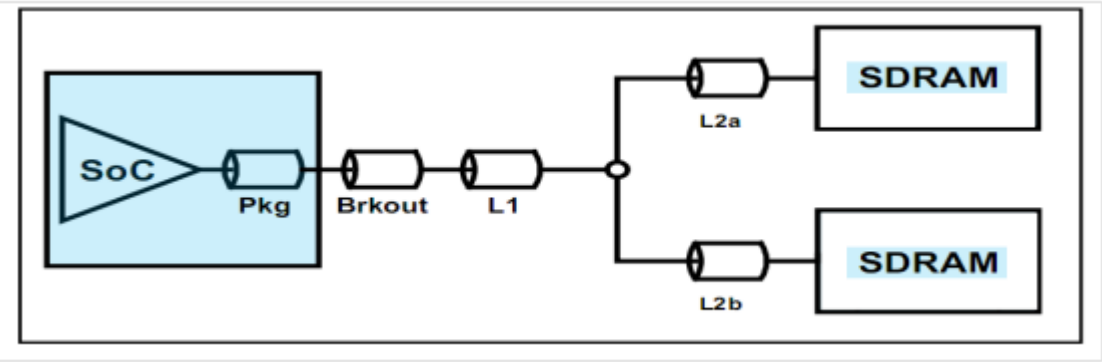

Table 28: DDR4 Control signal Layout Requirements

Parameter	Requirement
single-ended impedance	50 Ohm ±10%
Differential impedance	100 Ohm ±10%
（CSn,CKE,ODT signal）to CLK mismatch	under 30mil
（Command /Address ） to （Command / Address ） spacing	≥2 times the width of the trace
L2a to L2b mismatch	≤20mil
L2a length of CSn,CKE,ODT signal	≤600mil Make sure CSn,CKE,ODT signal length as short as possible.

Copyright © 2021 Rockchip Electronics Co., Ltd.

Command Signal Routing Topology:

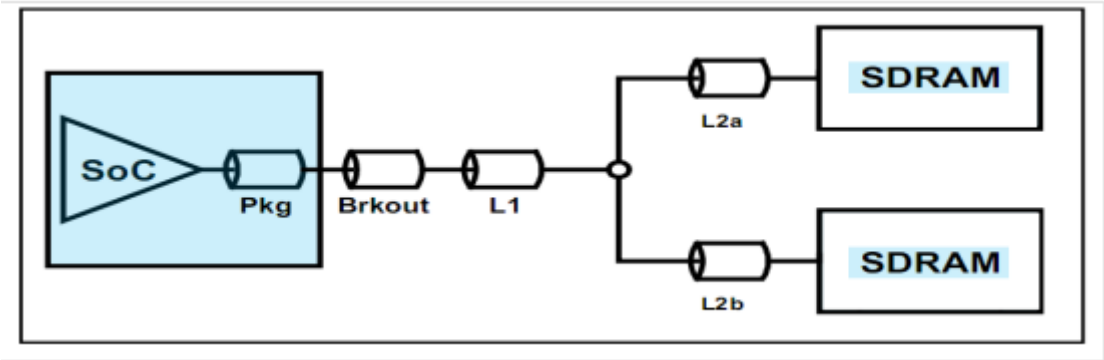

Table 29: DDR4 Command signal Layout Requirements

Parameter	Requirement
single-ended impedance	50 Ohm ±10%
Command signal to CLK mismatch of L1 part	under 600mil
（Command /Address） to （Command / Address） spacing	≥2 times the width of the trace
L2a to L2b mismatch	≤20mil
L2a length of Command signal	≤600mil Make sure Command signal length as short as possible.

Copyright © 2021 Rockchip Electronics Co., Ltd.

1.24 DDR4 ECC

Table 30: DDR4 ECC Data signal Layout Requirements

Parameter	Requirement
single-ended impedance	50 Ohm ±10%
Differential impedance	100 Ohm ±10%
Length between DQ and DQS (within a byte)	under 600mil DQ no need to match length of DQS. Make sure DQ length as short as possible.
Length between DM and DQS (within a byte)	under 600mil DM no need to match length of DQS. Make sure DM length as short as possible.
DQS_P to DQS_N mismatch (within a byte)	under 12mil
CLK_P to CLK_N mismatch	under 12mil
DQS to CLK mismatch	under 1500mil
Byte-to-byte spacing	≥2 times the width of the trace
DQ to DQ spacing within a byte	≥2 times the width of the trace
DQ to DQS spacing within a byte	Recommend≥3 times the width of the trace At least 2 times the width of the trace
CLK to all other traces spacing	Recommend≥3 times the width of the trace At least 2 times the width of the trace

Copyright © 2021 Rockchip Electronics Co., Ltd.

Control Signal Routing Topology:

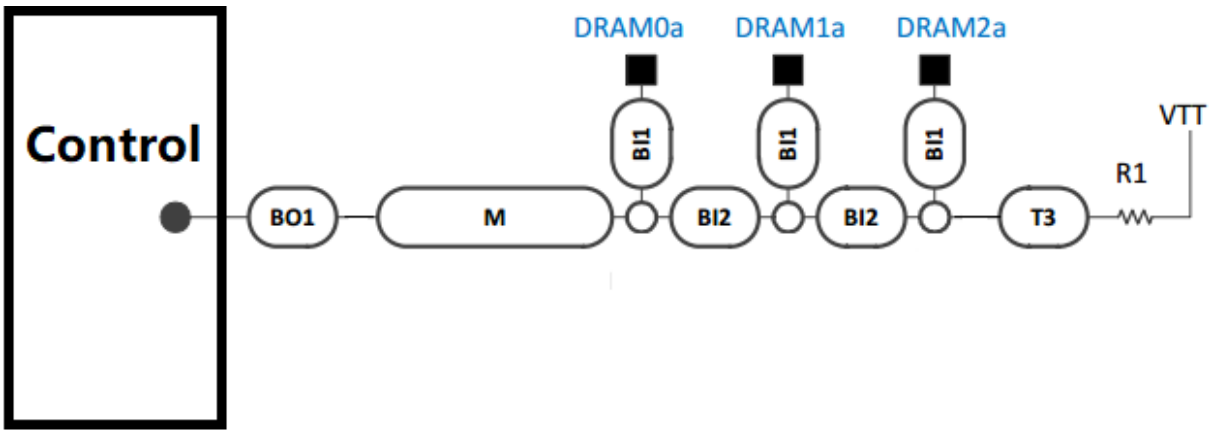

Table 31: DDR4 ECC Control signal Layout Requirements

Parameter	Requirement
M region single-ended impedance	43Ohm ±10%
single-ended impedance except M region	50 Ohm ±10%
Differential impedance	100 Ohm ±10%
（CSn,CKE,ODT signal）to CLK mismatch	under 60mil
（Command /Address） to （Command / Address） spacing	≥2 times the width of the trace

Copyright © 2021 Rockchip Electronics Co., Ltd.

Command Signal Routing Topology:

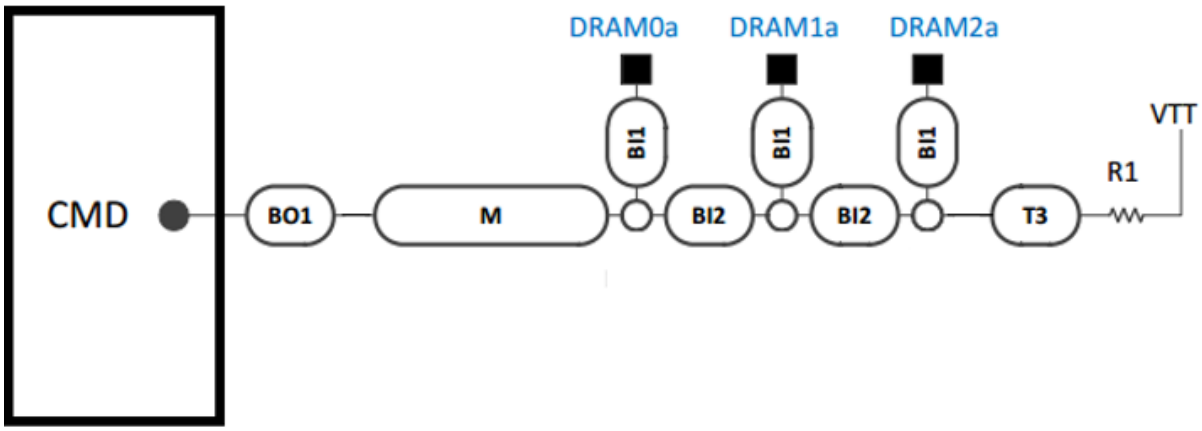

Table 32: DDR4 ECC Command signal Layout Requirements

Parameter	Requirement
M region single-ended impedance	50 Ohm ±10%
single-ended impedance except M region	50 Ohm ±10%
Command signal to CLK mismatch	under 600mil
（Command /Address） to （Command / Address） spacing	≥2 times the width of the trace

Copyright © 2021 Rockchip Electronics Co., Ltd.

1.25 LPDDR4

Table 33: LPDDR4 Layout Requirements

Parameter	Definition
single-ended impedance	50 Ohm ±10%
Differential impedance	100 Ohm ±10%
Length between DQ and DQS (within a byte)	under 600mil DQ no need to match length of DQS. Make sure DQ length as short as possible.
Length between DM and DQS (within a byte)	under 600mil DM no need to match length of DQS. Make sure DM length as short as possible.
（Command /Address ）to CLK mismatch	under 500mil
DQS_P to DQS_N mismatch (within a byte)	under 12mil
CLK_P to CLK_N mismatch	under 12mil
DQS to CLK mismatch	under 1200mil
Byte-to-byte spacing	≥2 times the width of the trace
DQ to DQ spacing within a byte	≥2 times the width of the trace
DQ to DQS spacing within a byte	Recommend≥3 times the width of the trace At least 2 times the width of the trace
（Command /Address ） to （Command / Address ） spacing	≥2 times the width of the trace
CLK to all other traces spacing	Recommend≥3 times the width of the trace At least 2 times the width of the trace

Copyright © 2021 Rockchip Electronics Co., Ltd.

1.26 LPDDR4X

Table 34: LPDDR4 Layout Requirements

Parameter	Definition
single-ended impedance	50 Ohm ±10%
Differential impedance	100 Ohm ±10%
Length between DQ and DQS (within a byte)	under 600mil DQ no need to match length of DQS. Make sure DQ length as short as possible.
Length between DM and DQS (within a byte)	under 600mil DM no need to match length of DQS. Make sure DM length as short as possible.
（Command /Address ）to CLK mismatch	under 500mil
DQS_P to DQS_N mismatch (within a byte)	under 12mil
CLK_P to CLK_N mismatch	under 12mil
DQS to CLK mismatch	under 1200mil
Byte-to-byte spacing	≥2 times the width of the trace
DQ to DQ spacing within a byte	≥2 times the width of the trace
DQ to DQS spacing within a byte	Recommend≥3 times the width of the trace At least 2 times the width of the trace
（Command /Address ） to （Command / Address ） spacing	≥2 times the width of the trace
CLK to all other traces spacing	Recommend≥3 times the width of the trace At least 2 times the width of the trace

Copyright © 2021 Rockchip Electronics Co., Ltd.